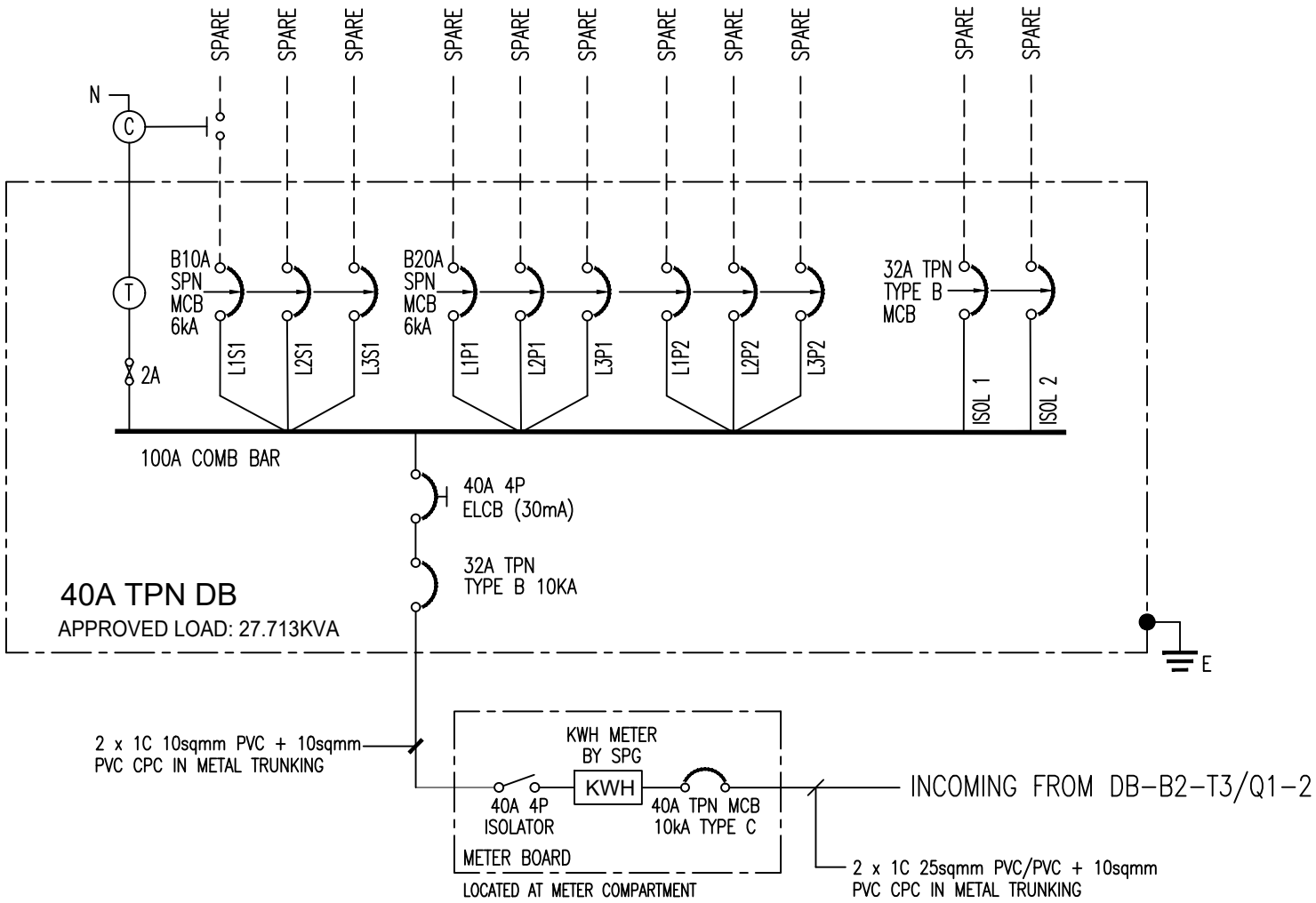

CLIENT / ADDRESS :	MAIN CONTRACTOR :	ELECTRICAL CONTRACTOR :	DRAWING TITLE :	LEW :	CHECKED :	DATE :
YUYI 5 PTE LTD PLQ MALL #B2-K1 10 PAYA LEBAR RD SINGAPORE 409057	SINGAPORE DEMOLITION HACKER N REMOVAL PTE LTD		SINGLE LINE DIAGRAM (SLD)	ELECTRICAL SEOW SWEE LEONG 8/25825 SINGAPORE		28 AUG 2025
					DRAWING NO. :	REV : 0